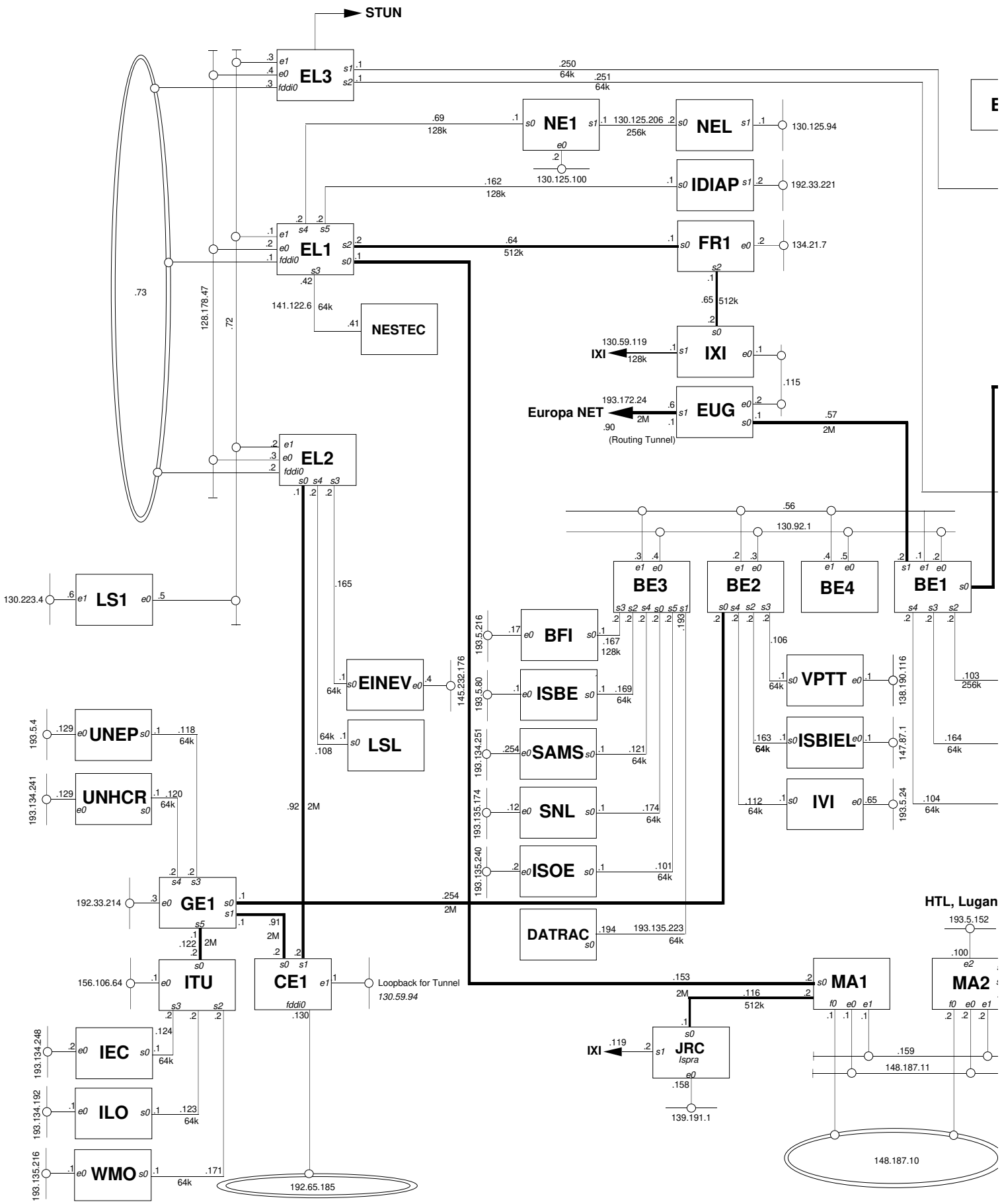

SWITCHlan **map**

© 1994 SWITCH

The PostScript™ version of this map can be fetched by anonymous ftp from nic.switch.ch [130.59.1.40] in the directory /network/SWITCHlan/map

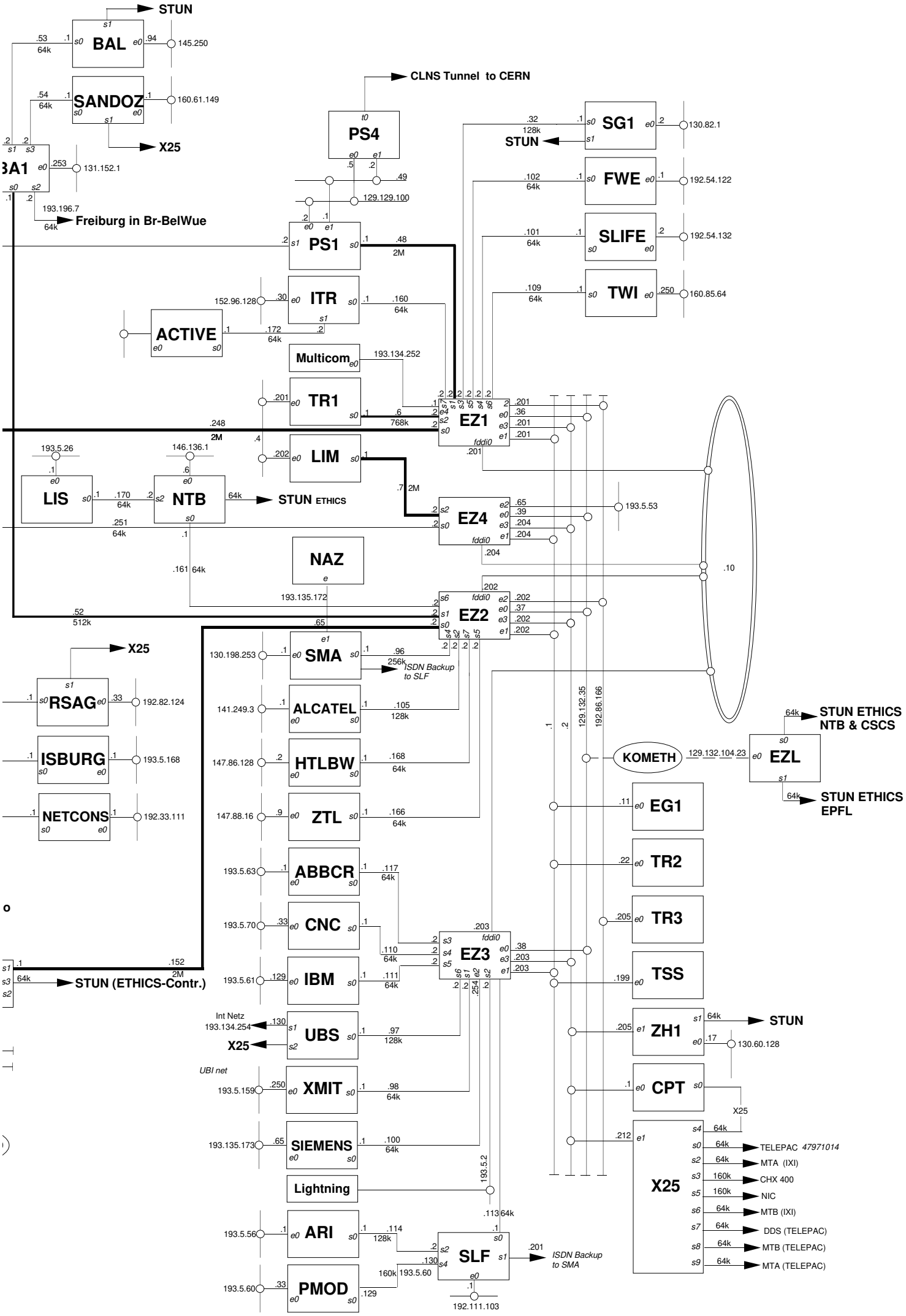
STUN
BAL
145.250
SANDOZ
160.61.149
X25
BA1
131.152.1
193.196.7
Freiburg in Br-BelWue
CLNS Tunnel to CERN
PS4
129.129.100
PS1
ITR
152.96.128
ACTIVE
Multicom
193.134.252
TR1
EZ1
LIM
LIS
193.5.26
NTB
146.136.1
STUN ETHICS
EZ4
193.5.53
NAZ
193.135.172
EZ2
SG1
130.82.1
FWE
192.54.122
SLIFE
192.54.132
TWI
160.85.64
RSAG
192.82.124
ISBURG
193.5.168
NETCONS
192.33.111
STUN (ETHICS-Contr.)
SMA
130.198.253
ISDN Backup to SLF
ALCATEL
141.249.3
HTLBW
147.86.128
ZTL
147.88.16
ABBCR
193.5.63
CNC
193.5.70
IBM
193.5.61
EZ3
UBS
Int Netz
193.134.254
XMIT
UBI net
193.5.159
SIEMENS
193.135.173
Lightning
ARI
193.5.56
PMOD
193.5.60
SLF
ISDN Backup to SMA
192.111.103
KOMETH
129.132.104.23
EZL
STUN ETHICS NTB & CSCS
STUN ETHICS EPFL
EG1
TR2
TR3
TSS
ZH1
130.60.128
CPT
X25
TELEPAC 47971014
MTA (IXI)
CHX 400
NIC
MTB (IXI)
DDS (TELEPAC)
MTB (TELEPAC)
MTA (TELEPAC)